Doosan Škoda Power

DOOSAN ŠKODA POWER turbines for saturated steam with output up to 1200 MWe

M. Kapic, L. Prchlík, M. Zoubek

Date: November, 2013

Department: Turbine Development

Skoda OEM References in NPP Turbines

- **Applications for VVER 440 reactor**
  - **Jaslovské Bohunice 8x 220 MW units**
  - **Dukovany 8x 220 MW units**
  - **Mochovce 8x 220 MW units**

- **Modernizations of 220MWe units**
  - **Modernization of LP and HP flow-parts and condensers – being gradually applied for all running units**
  - **HR improvement 5,15%**

- **Applications for VVER 1000 reactor**
  - **Temelín TG 1,2 2x1000 MW units**

- **Modernization of 1000MWe units**
  - **HP parts already modernized**
  - **LP parts being manufactured incl. new high-pressure control system**

Turbine 220 MW for NPS – upgraded design

Performance targets

		DUKOVANY	JASLOVSKE BOHUNICE V3,V4	MOCHOVCE V3, V4
Thermal output of NB	Original	1375 MWt	1375 MWt	1375 MWt
	Upgrated	5 + (2) %	7 + (2) %	11,7 + (2,3) %
		1444 MWt	1471 MWt	1537 MWt
Heat rate	Original	11,150 GJ/MWh	11,100 GJ/MWh	*11,250 GJ/MWh*
	Upgrated	10,580 GJ/MWh	10,523 GJ/MWh	10,452 GJ/MWh
	Improving	5,1 %	5,2 %	*7,09 %*
Power output	Upgrated	248,614 MW	251,664 MW	264,718

Turbine 220 MW for NPS – scope of the main modified parts - turbine

Retrofit of HP, LP parts – DUKOVANY, BOHUNICE

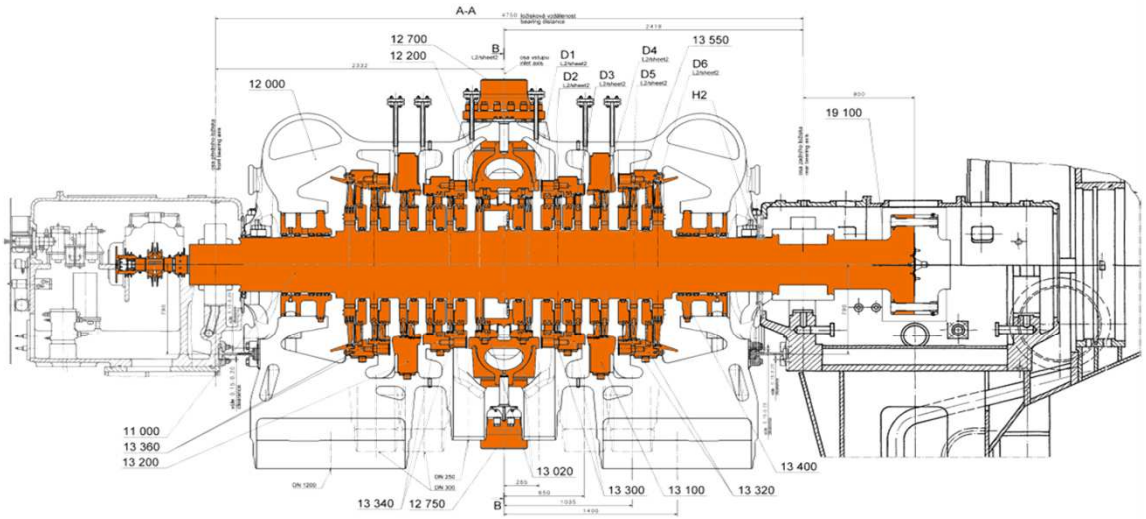

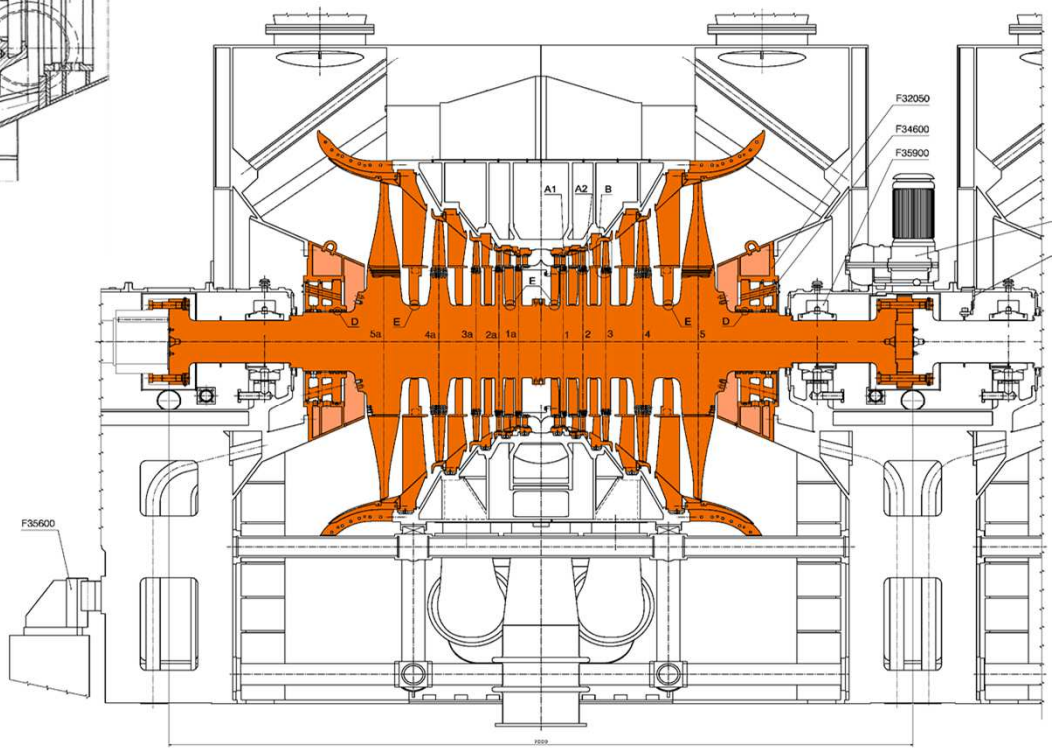

- Modern blade profiles – lower profile losses
- Increased stage reaction – lower speeds
- 3D blade profiles – reduced secondary losses
- Reduced clearances in rotor and shroud seals
- New family of last stage blades in LP
- Reduced effect of moisture erosion of LSB
- Outer casings refurbished

Turbine 220 MW for NPS – scope of modified parts - condensers

Tube bundle module for refurbishment of condensers for ŠKODA 220 MW-turbines at Dukovany Nuclear Power Plant - replacement of the existing tube bundles by titanium ones and by all- titanium tube plates of modular design

Reduced average condenser pressure from 6 to 5,35 kPa

Significantly extended condenser life-time

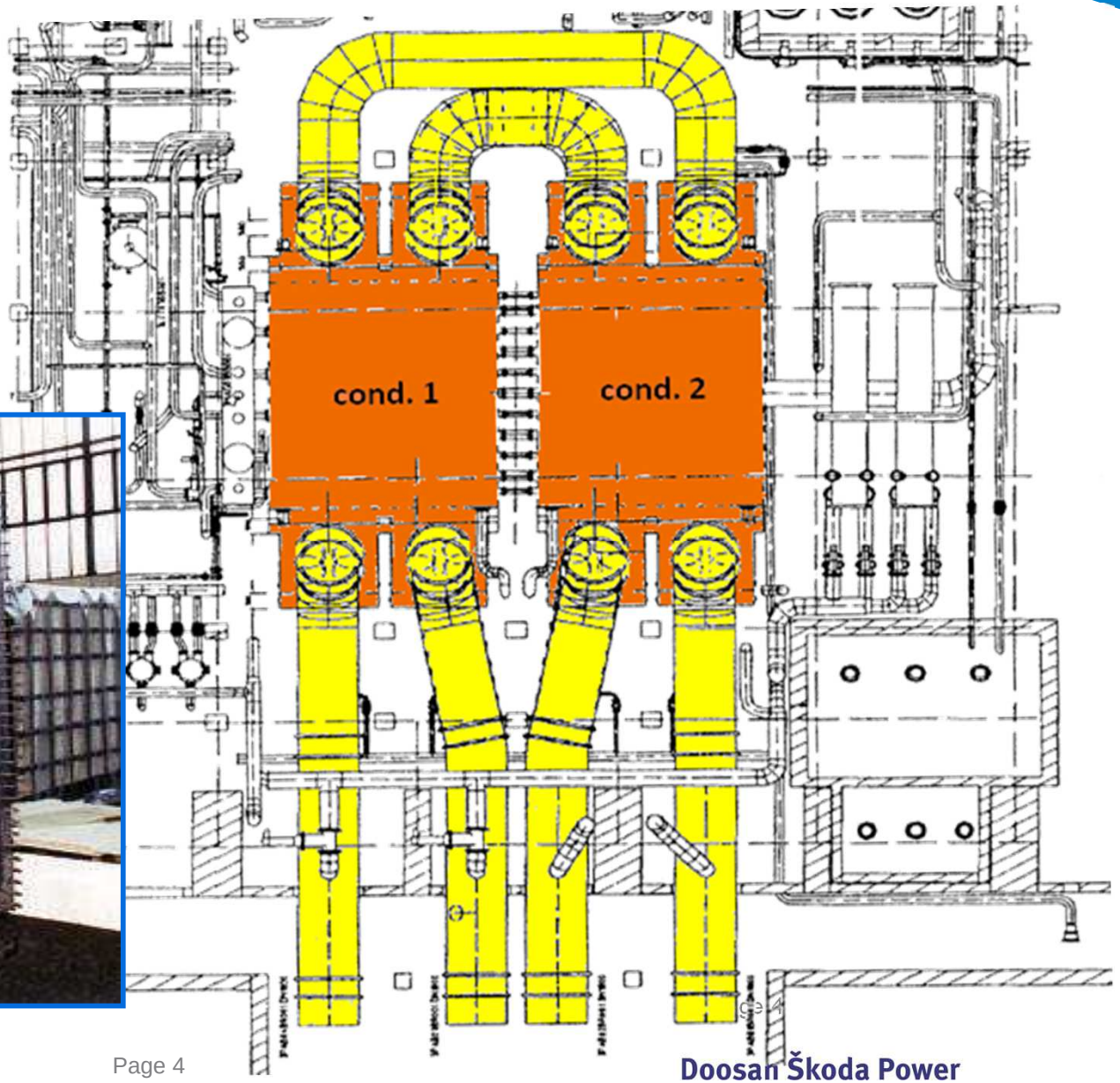

Loviisa NPP non OEM 4x260MWe modernization – main requirements

- **Extension of TG unit service life minimally by 40 years - divided into two steps:**
  1. **HP modernization**
  2. **LPs modernization**

- **Turbine design based on 1 500MWt reactor thermal power level**.
- Modernized HP turbine has to enable an operation with reactor thermal output 1 600 MWt (after minor steam path modification)
- Current control and protection system remaining
- Efficiency and electrical power improvement

- **Maximal annual electrical output**
  – 8000 hours annually with full load

- **Retrofitted turbine fit to existing foundation.**
- No modification on foundation is allowed.

- Period between turbine overhauls 12 years

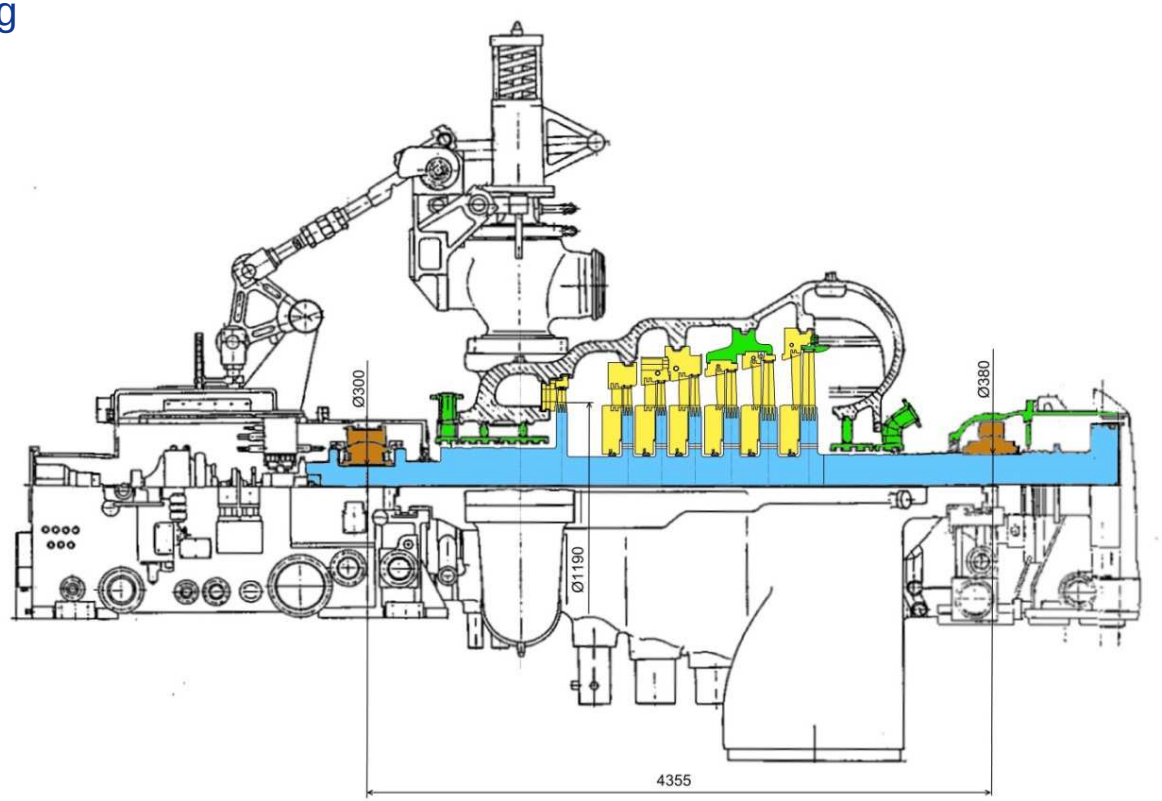

Loviisa NPP non OEM 4x260MWe modernization

LP sections – pre-contract negotiations

HP section – contracted and being manufactured

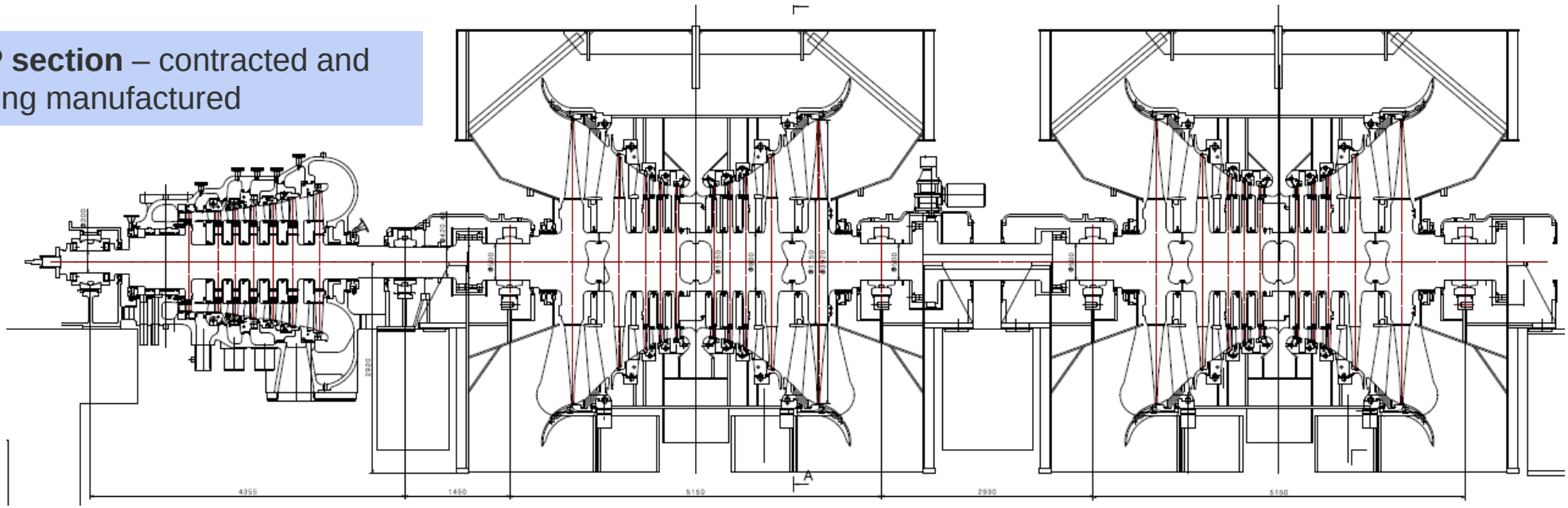

CWT [°C]	Original Turbine [MW]	HP Retrofit [MW]	Power Increase [MW]
12,6	259,60	265,32	5,72
5	261,70	268,31	6,61
16	256,40	262,46	6,06

Turbine 1000MWe for NPP – scope of modified parts – HP turbine

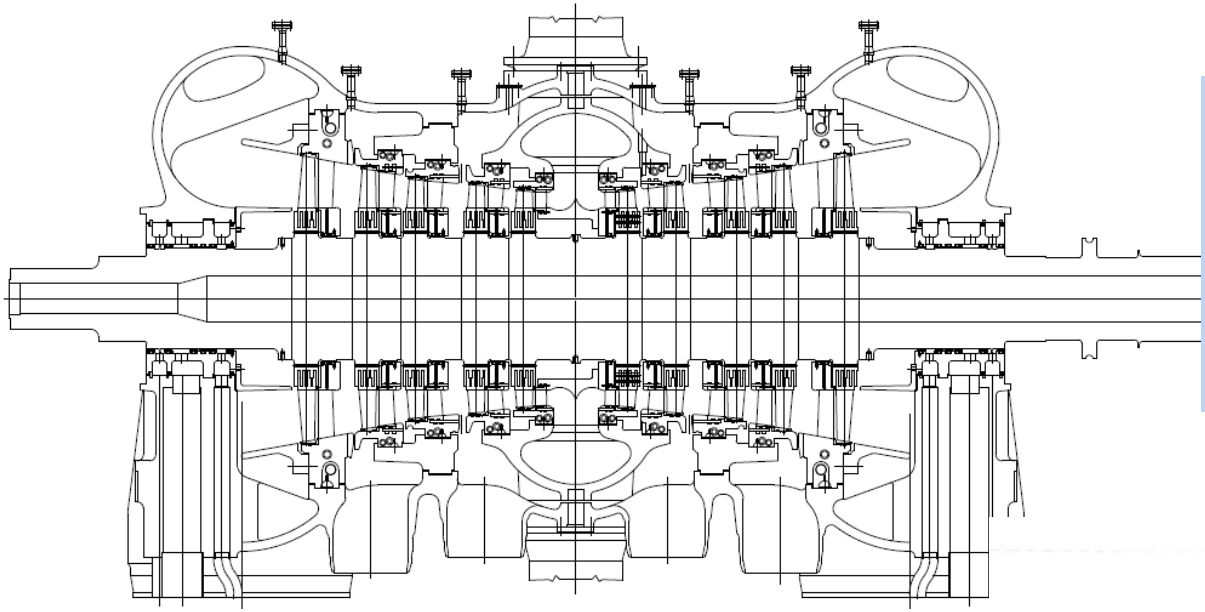

- Bladed HP rotor HP diaphragms
- HP inner casing
- HP carriers
- New sealing of outer glands

Electric output improvement after HP section modernization by approx. 2,5% from HP section output

Key Elements in the Turbine Design – Modern LSB

LSB 48“ was a common R&D project of Škoda Power and Ansaldo

LSB 48“ already applied in projects:

- Ansaldo project 400 MW (Belgium) 2011
- Pocerady CCPP 270 MW 2013
- Hatay CCPP 320 MW 2013
- Eshkol CCPP 138 MW 2013
- Temelin LP modernization 2014

Length	1220 mm
Hub diameter	1880 mm
Curved fir-tree root	
Two contact circles	Shroud+Tie-boss

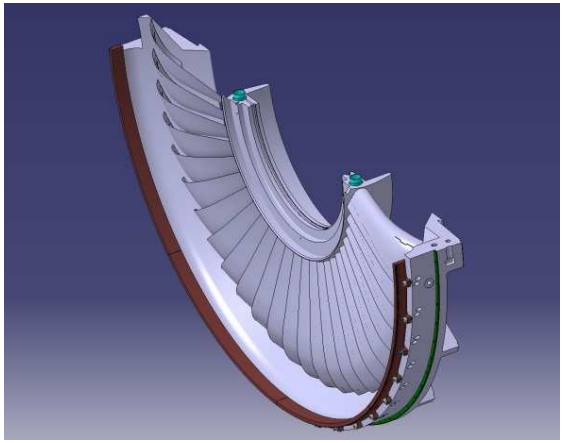

Key Elements in the Turbine Design – ICB Concept

Integrally Connected Bucket development

long term R&D ICB common project within DHI

Increasing of mechanical dumping level for rotor blading

Blade pre-twist and dumping wedge elements solution

ICB pre-twist concept for shorter blades

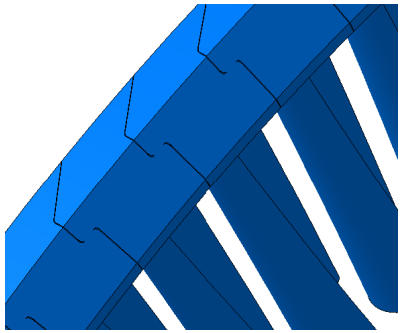

ICB pre-twist concept for longer blades

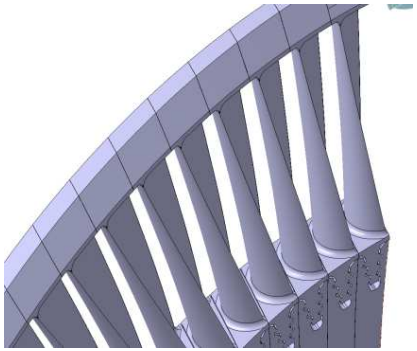

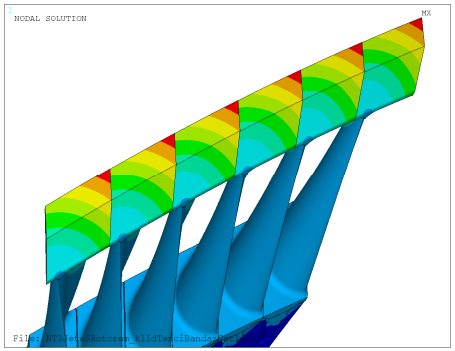

ICB untwist concept for longer blades

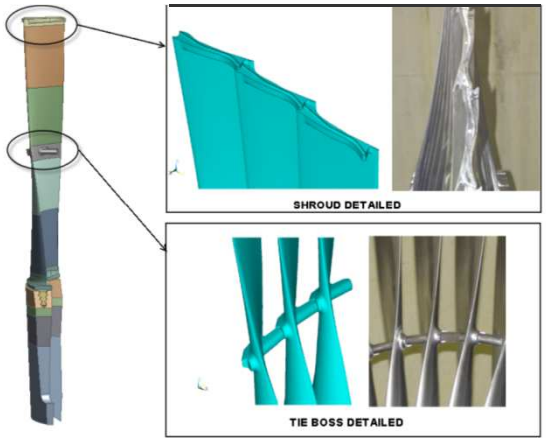

Turbine 1000MWe for NPP – scope of the main modified parts – LP turbine

Modernized LP section 3D model

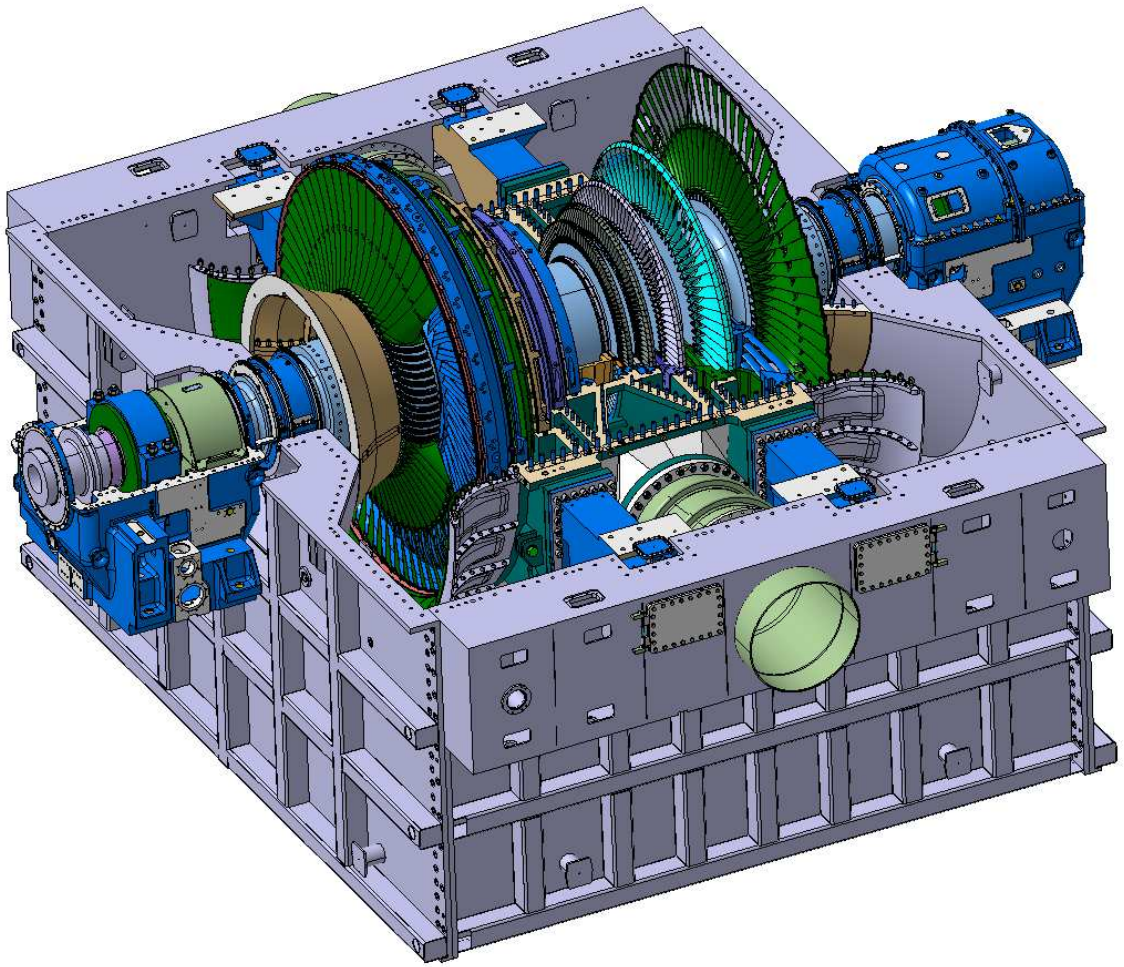

- Bladed LP rotor (5 stages instead of original 4 stages)
- LP diaphragms
- LP inner casing
- HP carriers
- New sealing of outer glands
- New bearings (incl. rear HP)

- **Guaranteed electric output improvement after LP section modernization is 22 MW**
- **For 104% of reactor thermal output 1083 MWe will be reached**

Basic Thermal Calculation Information on 1200MWe Unit Size

Settings for thermal calculations (MIR1200):

• Thermal reactor output	3200 MWt
• Blow down	16,67 kg/s
• Pressure at SG outlet	7 MPa
• Moisture content at SG outlet	0,2 %
• Feed water temperature	224,8 °C

Main results of heat cycle calculations:

• TG electrical output (100%, condensing, nominal t_{cw} 21°C)	1205,7 MWe
• TG electrical output (100%, condensing, t_{cw} 15°C)	1215,5 MWe
• Heat supply max.	306,0 MWt

Main cycle components:

• LP heaters	5
• HP heaters	2
• Reheaters	2

The new turbine design must bring

- **High operational reliability – applying proved solutions**
  - ✓Low operational vibrations
  - ✓Safe valves and connected piping design
  - ✓Safe blade design
  - ✓Application of proven materials and high steam quality
  - ✓Long-term resistance of LSB to moisture erosion

- **Maximal turbine electrical output – minimizing losses**
  - ✓ Improved thermal cycle design
  - ✓ High efficient blade design

Longitudinal Section of TG 1200 MWe Unit Size

Basic turbine configuration: 1HP + 3LPs with new LSB 54 “ LSB

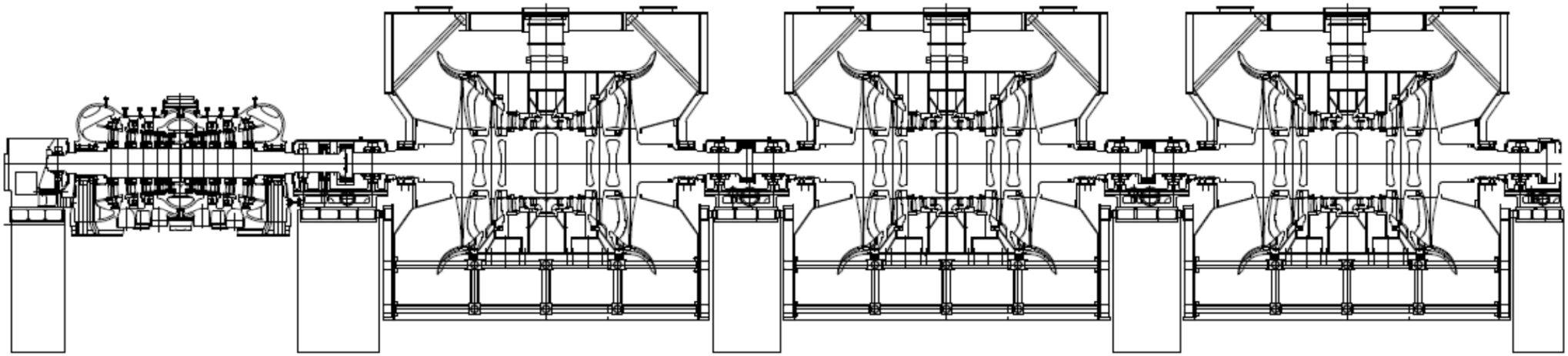

HP Part

High precision assembled diaphragms

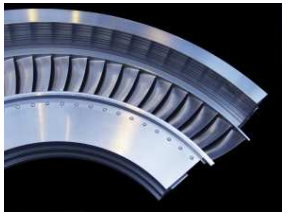

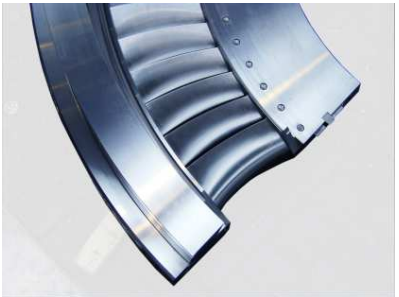

Proven HP shroud from modernization

27NlCrMoV15 6 monoblock rotor

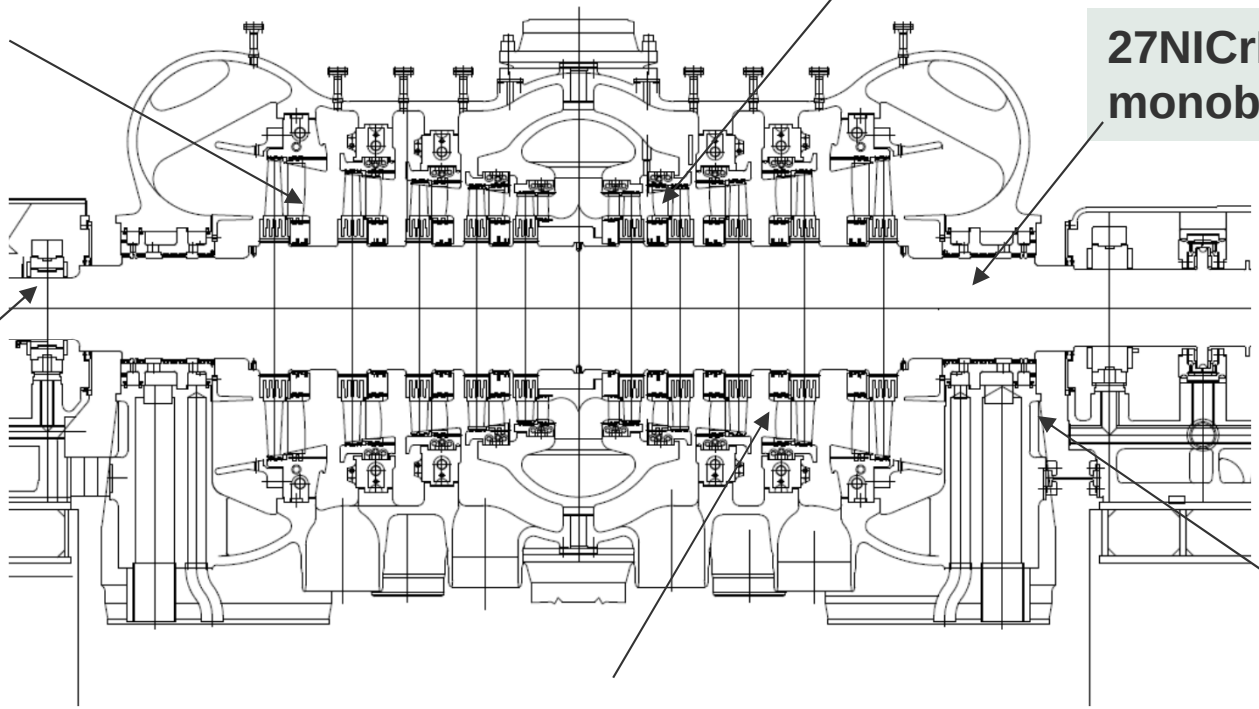

12% Cr cast casings (G-X8CrNi12)

New design of 3D increased reaction blades

LP Part

Modern full ICB solution

S355 steel for LP casings

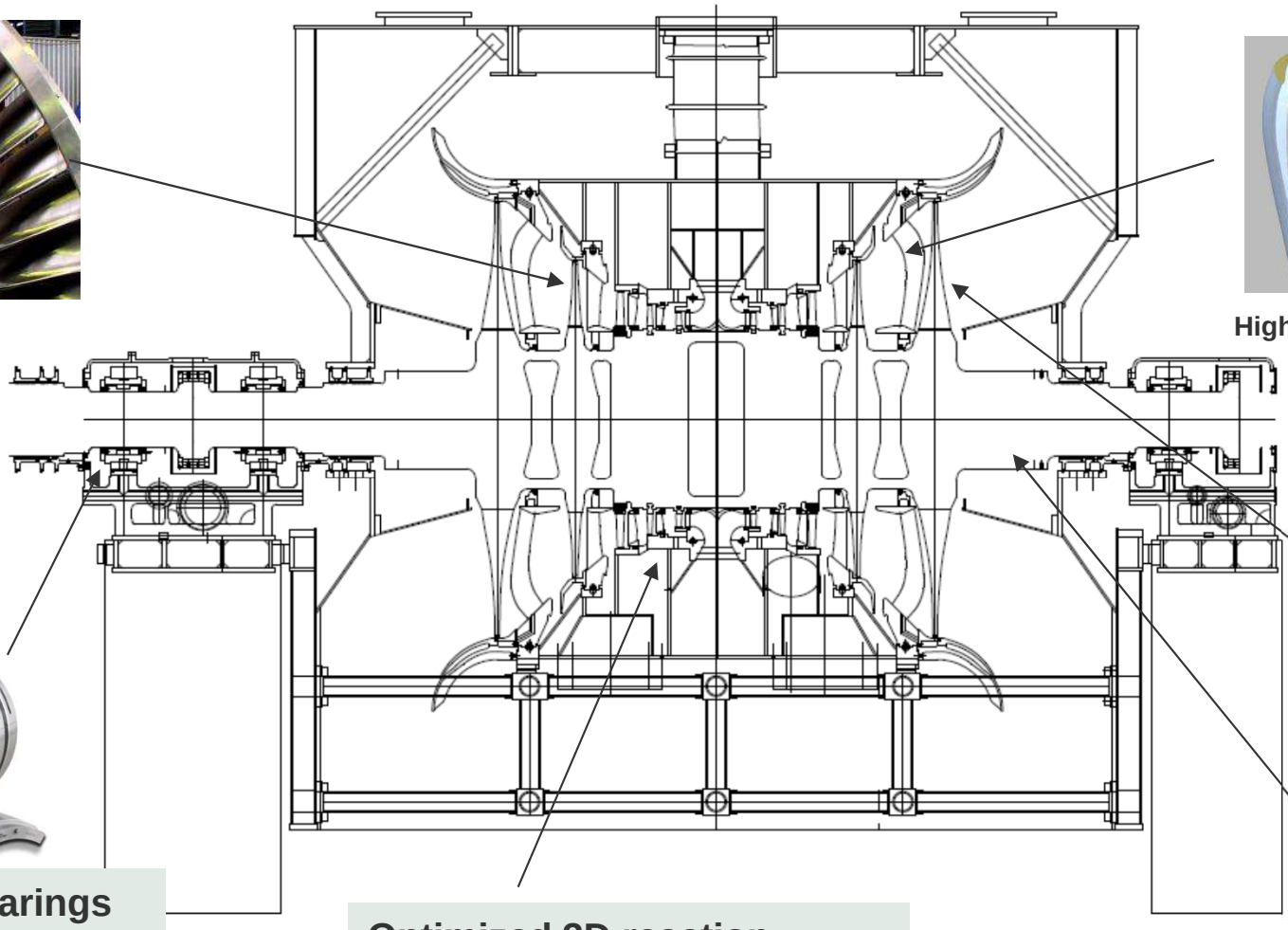

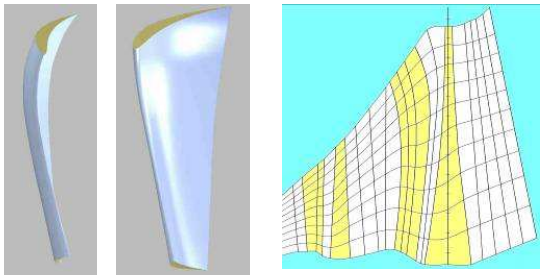

High efficient 3D stationary blade design

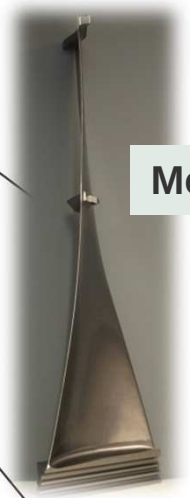

Modern LSB 54“

Proven two bearings per rotor solution

Optimized 3D reaction blading for front stages

27NICrMoV15 6 welded rotor

Elements in the Turbine Design – HP control valves

Large size valves

- New balanced design of control valve
- Experimental tests on half scale models with air and steam

New LP intercept and control flaps

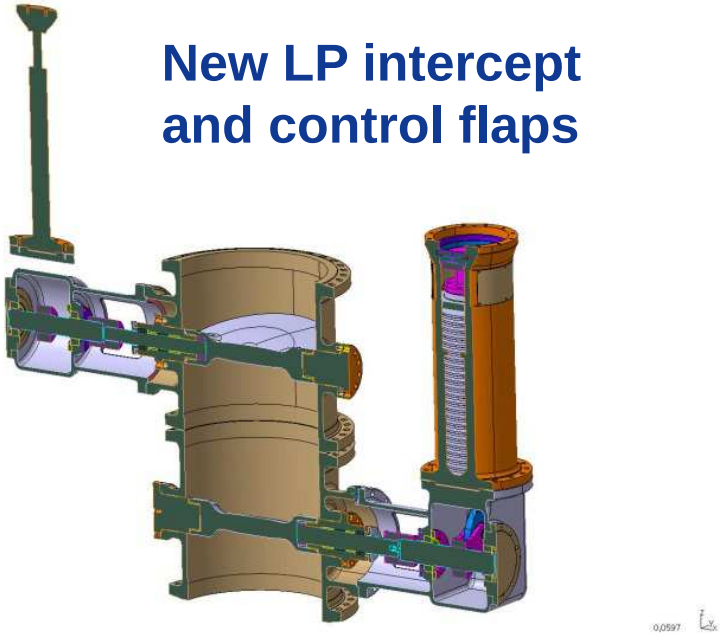

Possible new or conventional valve configuration

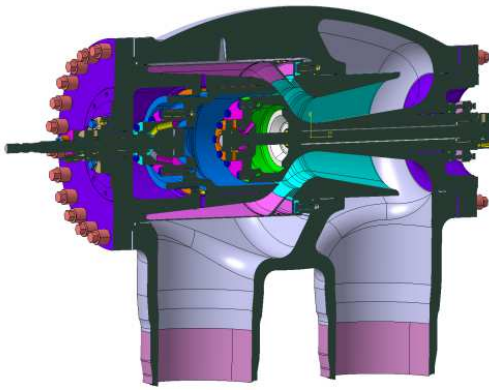

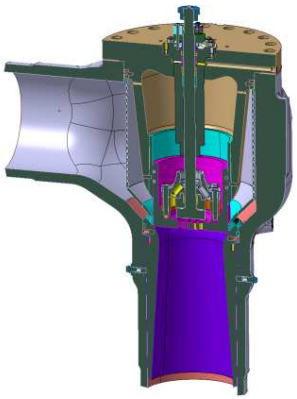

Test valves for air and steam

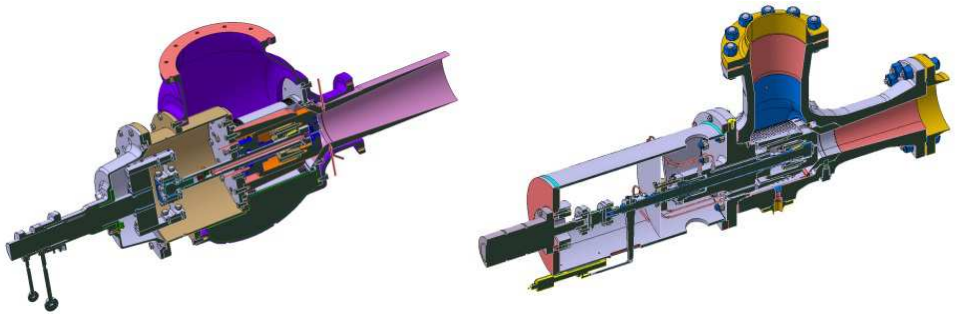

Elements in the Turbine Design – Blading of HP and LP Parts

•Modern high reaction stage 3D blade profiles development

- ▪Development of full 3D blading for stages with optimized load and reaction
- ▪Through-flow analyses for all stages
- ▪Reduction of profile, secondary, leakage, Mach number and leaving losses

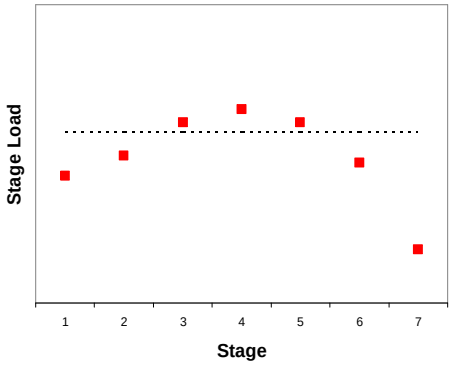

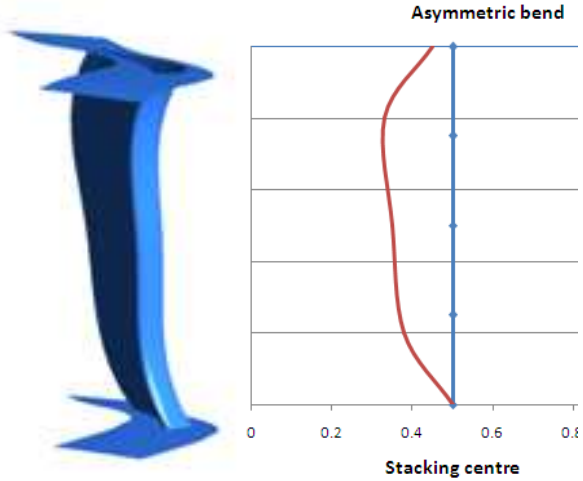

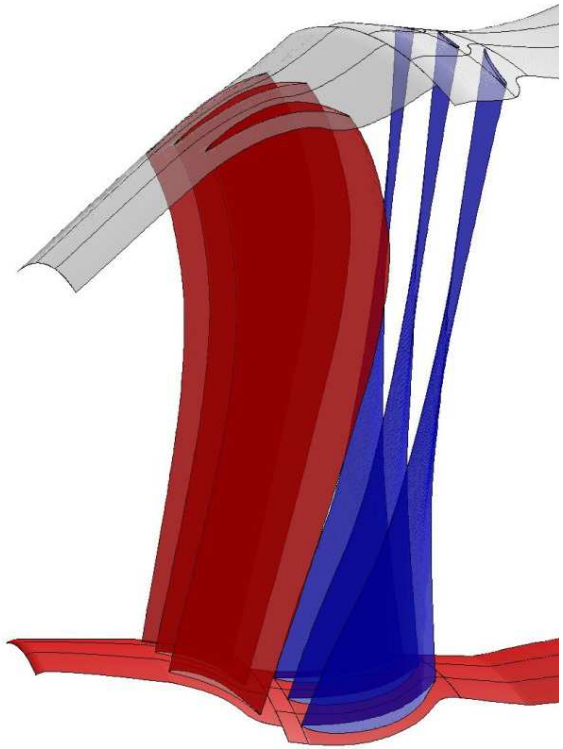

CCB blading tests

Z shroud CCB for LP1 &2 Temelin modernization

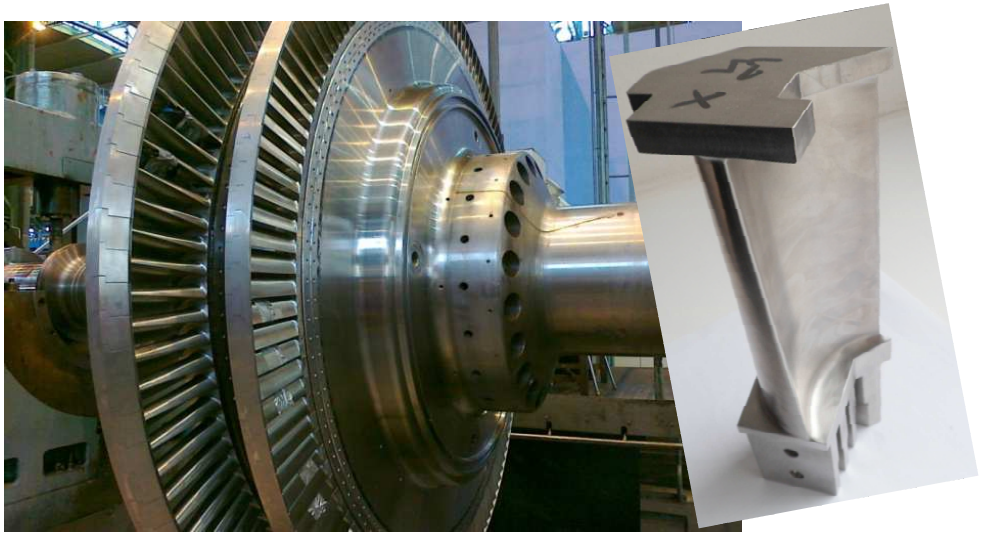

V shroud CCB assembly testing rig for IP stages (IP1 Prunerov)

Full-scale testing rig for reaction blading with CCB (HP15 MTD 30)

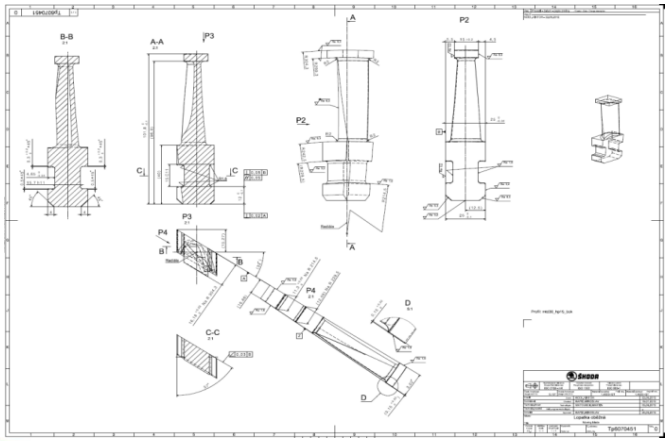

Doosan Škoda Power

Elements in the Turbine Design – Rotor Weling

- Vertical position of rotor on rotating table
- Horizontal welding by 2 narrow gap torches TIG HOT WIRE
- Separate stand for intermediate layer deposition and PWHT
- Induction pre-heating
- Horizontal rotating electrical furnace for PWHT and stability test

54“ M8/50Hz titanium LSB

Length	1375 mm
Hub diameter	1950 mm
Annulus area	14.4 m^2
Straight fir-tree root attachment	
Two contact circles	**Shroud + Tie-boss**

Doosan Škoda Power

Test Disc for 54“ Titanium LSB Machining

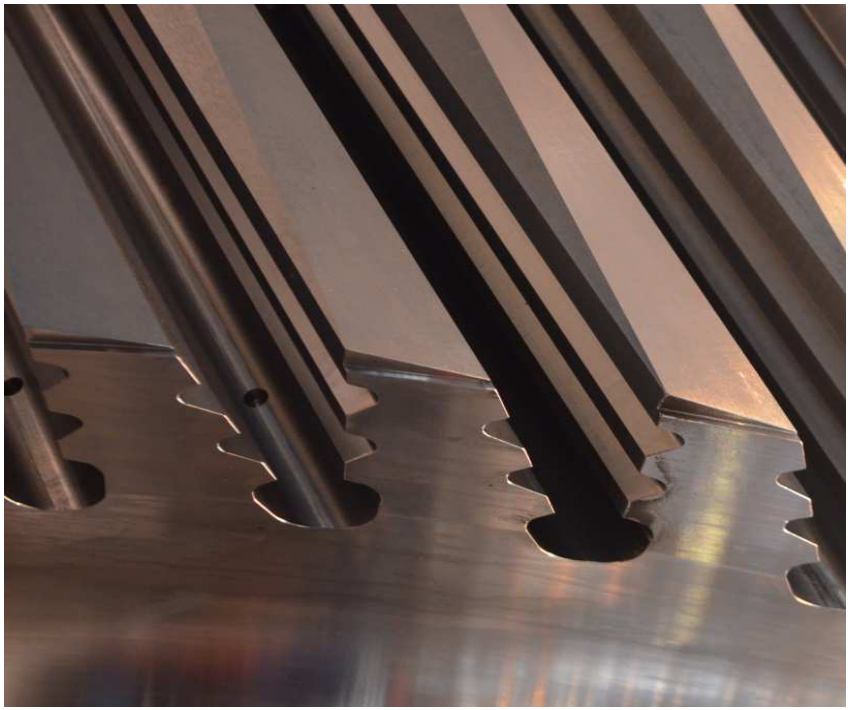

Full-size wheel for dynamic tests in Skoda facility

Steam Test Ti LSB 54“ scaled

- LSB group scaled down in 1:3,2 scale
- Manufactured in Skoda
- To be tested in Doosan facility in Korea
- Efficiency and dynamic properties for large range of operation loads

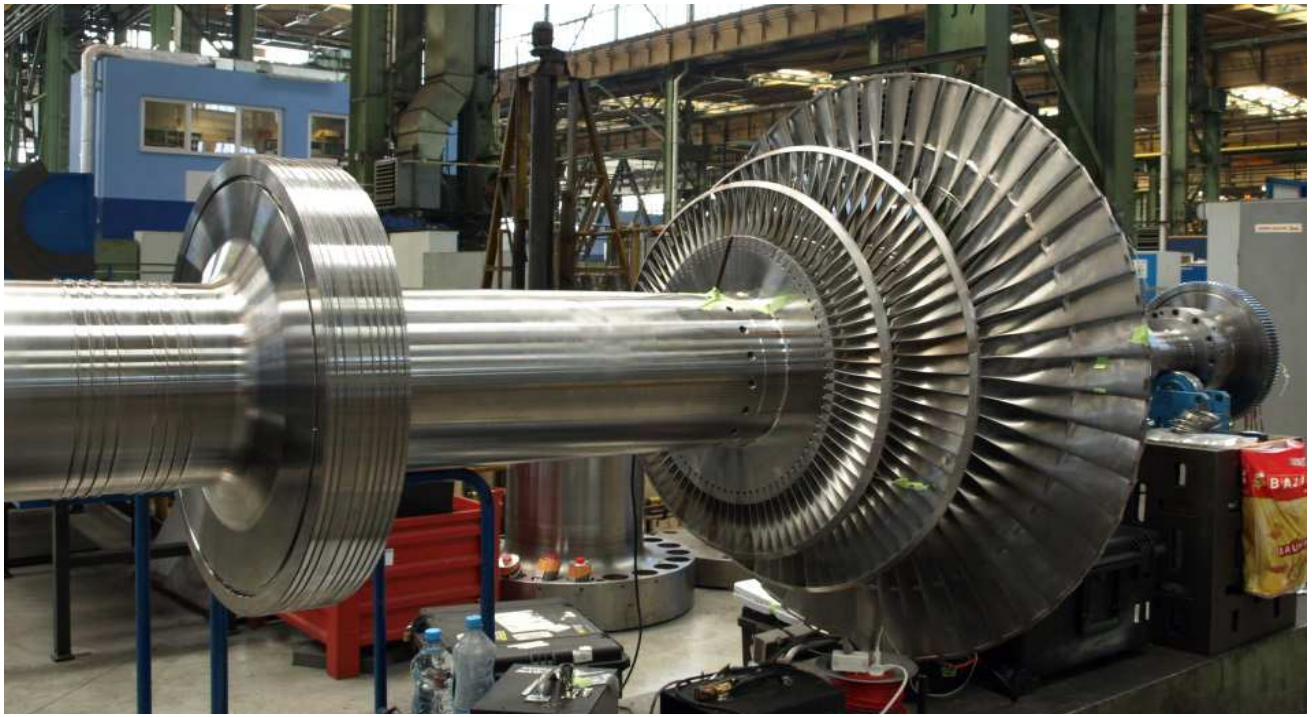

Thank you for your attention