ZAT

ŘEŠENÍ PRO BUDOUCNOST

The "Sandra Z100" in position evaluation system for control rods in VVER 1000

Jan Jaňour

11. November 2013

Conference VVER 2013

Replacement of position evaluation system on 1st a 2nd blocks of NPP Temelin

In November 2008 the Contract about modernisation of a part of RRCS for NPP TEMELIN was signed. The part of system that measures and evaluates reactor rods position.

It represents complete replacement and modernisation of:

- Cabinets of position evaluation
- Cabinets of bottom end position evaluation
- Cabinet of diagnostics
- Cabinet of stend

Total number of replaced cabinets is **30 pcs** for both blocks of NPP Temelin.

RRCS – group and individual operation control mechanisms for VVER 1000 nuclear reactors

- Perform all functions to secure all basic operating modes of reactor
- Supplies and protects linear step motors of rod drives
- Includes a two-level operation diagnostic tool for continuous equipment status monitoring
- Provides measuring of regulation rods positions, transfer and display of data in the main control room and the emergency control room
- **Replacement of position evaluation system on 1st a 2nd blocks of NPP Temelin follows the exchange of our control systems of linear stepping drives, which our company made in 2006**

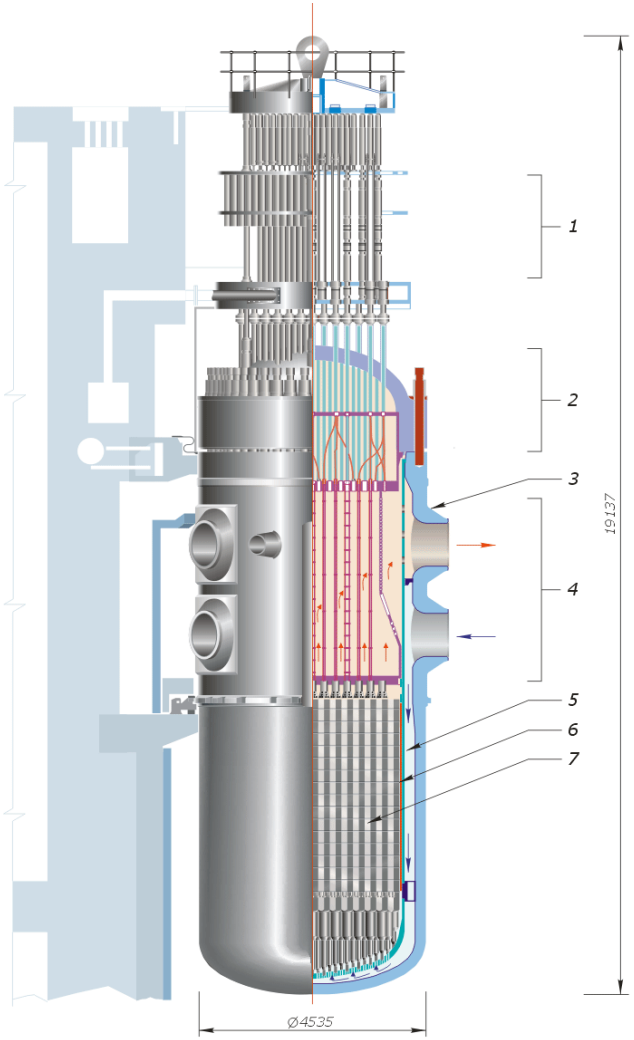

Replacement of position evaluation system in NPP Temelin – Interesting data

- Investor: **ČEZ a.s.**
- Implementation in the period of 2008÷2012 (2 blocks, 3 periods)
- **1st Period** DU1
  - Creation of design documentation (01/2009÷09/2009)
- **2nd Period** DU2
  - Design, development and production of control system (10/2009÷12/2010)
  - Installation on 1st block (12/07/2011÷12/09/2011)
- **3rd Period** DU3
  - Production of control system (07/2011÷01/2012)
  - Installation on 2nd block (12/04/2012÷21/06/2012)

Replacement of position evaluation system in NPP Temelin – Interesting data

- Cabinet of position evaluation, 8pcs/block, 61 channels
- Cabinet of bottom end position evaluation, 4pcs/block, 61 channels
- Cabinet of monitoring and diagnostics + data transfer
- Cabinet of stend (position measuring outside reactor)

Replacement of position evaluation system in NPP Temelin – Technical data

The control system is based on the new platform ZAT SandRA Z100 in combination with the proved system ZAT Primis 2000

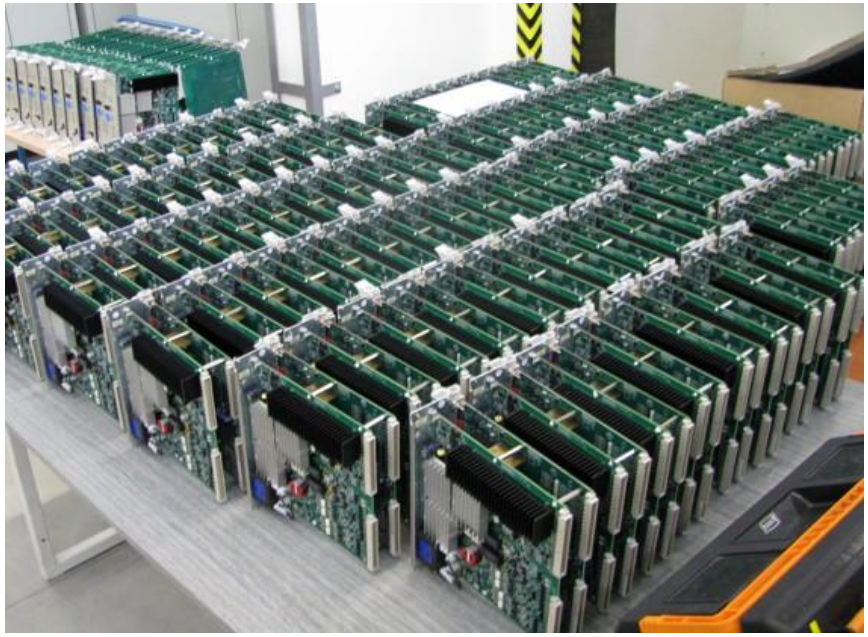

- The whole system consists of 260 independent electronic units, modules and blocks with more than 210 microcontrollers / per block
- Main features
  - Modular design
  - Two-level diagnostics
  - Measuring and comparing of sensor characteristics

Basic parts

- Basic part of the system are electronic blocks for position sensors supply, parameters measuring and evaluation of the regulation rods position
- Electronic blocks were designed for two sensor types which were developed by Škoda JS
  - UP-2
  - UP-3 (1 piece in „trial“ operation since 2005, on 1st block)
- Blocks are connected with the cabinet of diagnostics via redundant communication line
- The cabinet of diagnostics has two purposes
  - Upper level of diagnostics of the whole system
  - Communication with the parent system

Physical principles of sensor UP-2

- Developed by the team of ŠKODA JS experts, as a modernised type of original sensor
- It is placed into the hard environment with high temperature inside of reactor
- This represents proved principle of inductive sensor for measuring of reactor control rods position
- Bases of position sensor are two triples of coils and the core compound from magnetic and non-magnetic parts (magnetic shunt)
- By influence of magnetic material features of the core the change of induced voltage on the coils occurs
- Combination of value of voltage on individual coils gives a code of reactor control rods position with accuracy 16-19 steps (1 zone, ± 350 mm)

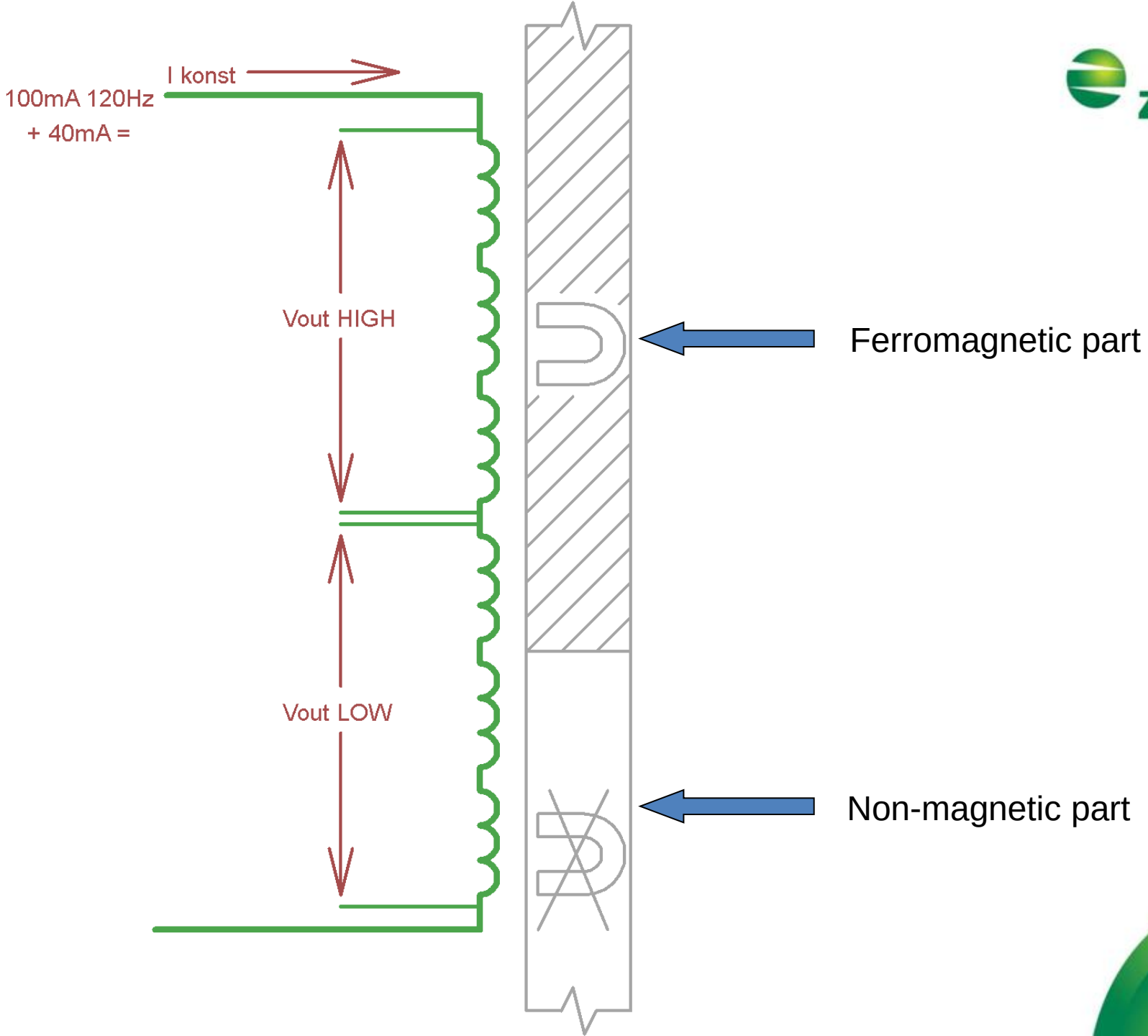
I konst
100mA 120Hz
+ 40mA =
Vout HIGH
Vout LOW
Ferromagnetic part
Non-magnetic part

ZH1005P1 – the block of position evaluation

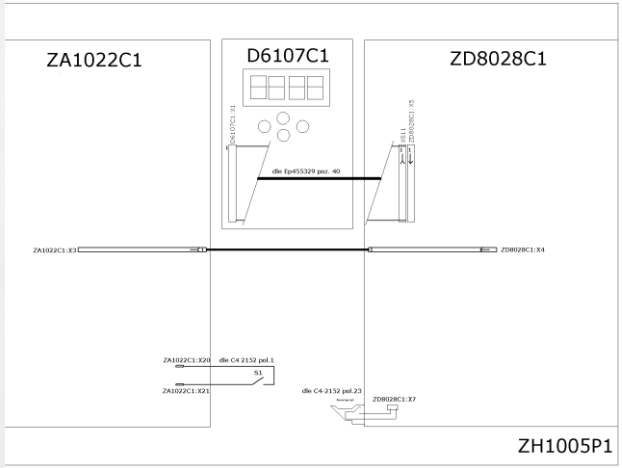

- 4 analog inputs
- 3 voltage inputs (2 for sensor output, 1 for generator voltage) and 1 current input for generator current
- Each input measures both DC and AC value of the signal

The block ZH1005P1 is a part of systems dealing with measuring position of the VVER1000 reactor regulation mechanisms.
Its purpose is to provide the supply for the inductive position sensor UP-2 and further the regulation mechanism position evaluation based on processing the signals from UP-2 and transferring the values to the superior system via binary outputs, current loop output and redundant SSIO communication line.
The block ZH1005P1 can be configured either as general position indicator or lower limit position indicator.

Principle of sensor UP-3

- Due to increasing demands for regulation of control rods, ŠKODA JS experts team developed position sensor of III. Generation
- Sensor is based on well-tried position reading principle (inductive sensor), used in hard conditions on many NPPs
- Base principle of the position sensor is LF transformer. This transformer has several secondary coils and core compound from magnetic and non-magnetic parts (magnetic shunt)
- Due to the magnetic core features, induced voltage on secondary transformer coils is changed in accordance with magnetic or non-magnetic part of the core
- Combination of voltage level on secondary coil windings gives us binary code of control rod position with an accuracy of ±1 step (20 mm)

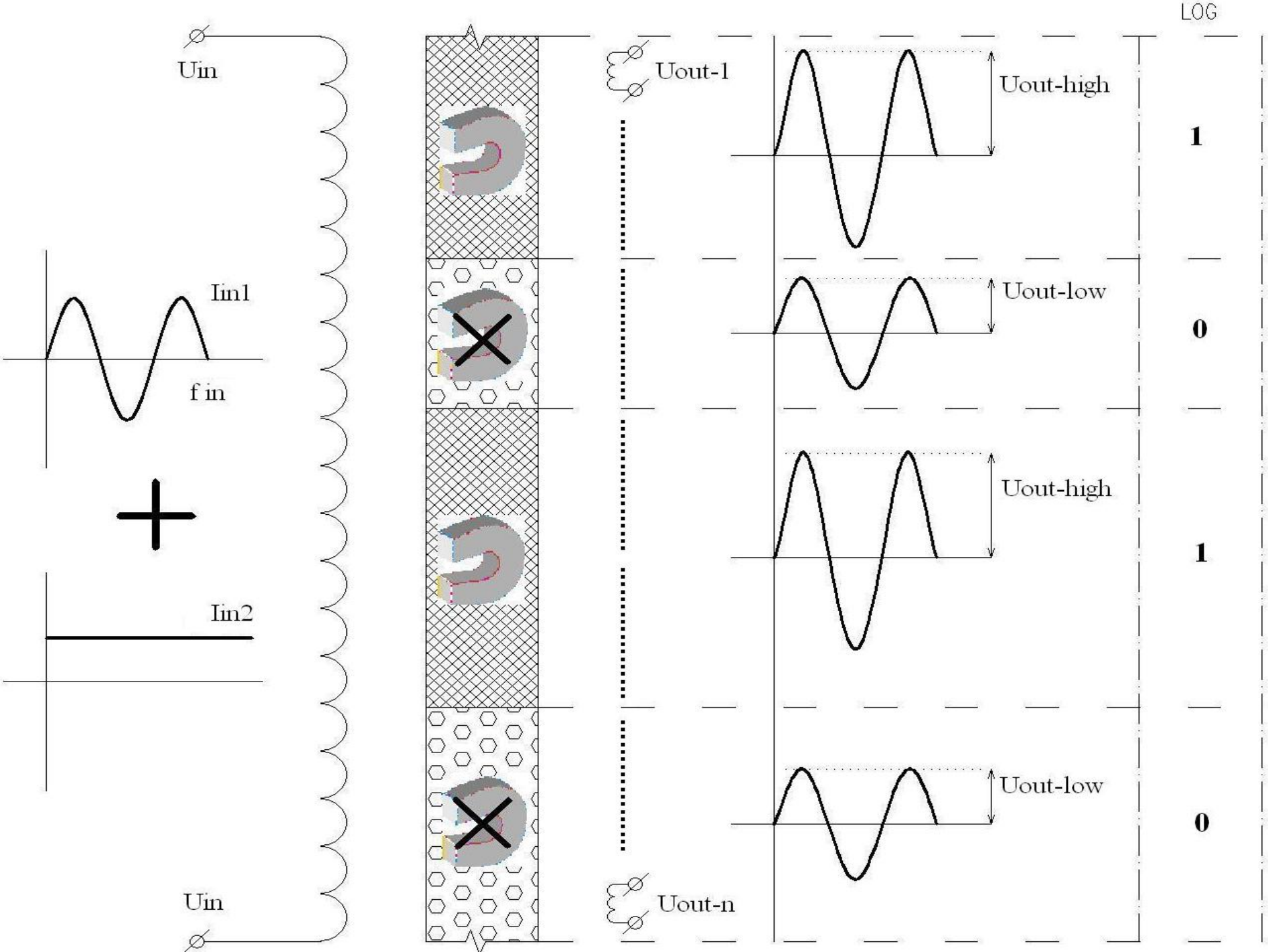
LOG
Uin
Iin1
f in
Iin2
Uin
Uout-1
Uout-high
1
Uout-low
0
Uout-high
1
Uout-low
0
Uout-n

ZH1009P1 – the block of position evaluation

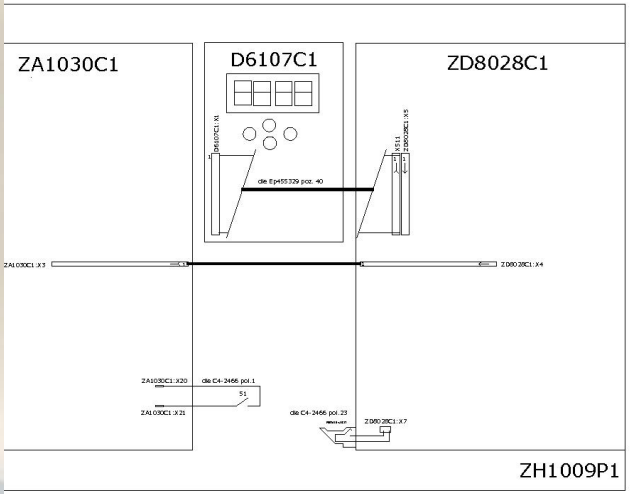

- 15 analog inputs
- 14 voltage inputs (12 for sensor output – secondary voltage, 1 for primary voltage, 1 for generator voltage) and 1 current input for generator current
- Each input measures both DC and AC value of the signal

The block ZH1009P1 is a part of systems dealing with measuring position of the VVER1000 reactor regulation mechanisms.
Its purpose is to provide the supply for the inductive position sensor UP-3 and further the regulation mechanism position evaluation based on processing the signals from UP-3 and transferring the values to the superior system via binary outputs, current loop output and redundant SSIO communication line.

Requirements for position reading

- Electronic control system must ensure error-free operation of the sensor in all reactor operating modes
- Namely during preheating of the reactor vessel before reactor start-up there are big temperature changes in conjunction with measured voltage changes on sensor
- Position evaluation must be temperature stable
- Based on sensor parameters measured on 20°C the electronic control system ensures:
  - Diagnostics of the coil operational status on all windings (coil warming, coil winding interruption)
  - Self-calibration of the threshold level for right position evaluation (temperature stable position evaluation, sensors error signaling)

Replacement of system – evaluation

System position evaluation of control rods of reactor was successfully implemented and qualified for applications and usage in nuclear energetics as a safety related system for functions of **B category**.

After more than two-year operation on the 1st block and one–year operation on the 2nd block of NPP Temelin the modernized system confirms the success of selected technical design and quality of **ZAT SandRA Z100** system.

THANK YOU FOR YOUR ATTENTION

DON‘T HESITATE TO ASK QUESTIONS.

Ing. Jan Jaňour
Vedoucí odborné
skupiny Vývoj aplikací

+420 377 438 281
+420 737 216 765
jan.janour@zat.cz
www.zat.cz

ZAT a.s.
sídlo společnosti:
K Podlesí 541
261 01, Příbram VI
Česká republika

ZAT a.s.
pracoviště Plzeň:
Písecká 16
326 00 Plzeň
Česká republika